Cambridge Assessment International Education

Cambridge IGCSE™

CANDIDATE NAME	

CENTRE NUMBER						CANDIDATE NUMBER				

8908856574

DESIGN & TECHNOLOGY **0445/42**

Paper 4 Systems & Control **October/November 2021**

1 hour

You must answer on the question paper.

No additional materials are needed.

INSTRUCTIONS

- Section A: answer **all** questions.
- Section B: answer **one** question.
- Use a black or dark blue pen. You may use an HB pencil for any diagrams or graphs.
- Write your name, centre number and candidate number in the boxes at the top of the page.
- Answer in the space provided.
- Do **not** use an erasable pen or correction fluid.
- Do **not** write on any bar codes.
- You may use a calculator.

INFORMATION

- The total mark for this paper is 50.
- The number of marks for each question or part question is shown in brackets [ ].
- All dimensions are in millimetres.

This document has **20** pages. Any blank pages are indicated.

DC (LK/SW) 206574/1
© UCLES 2021

Section A

Answer **all** questions in this section.

1 Fig. 1.1 shows a satellite dish for a television.

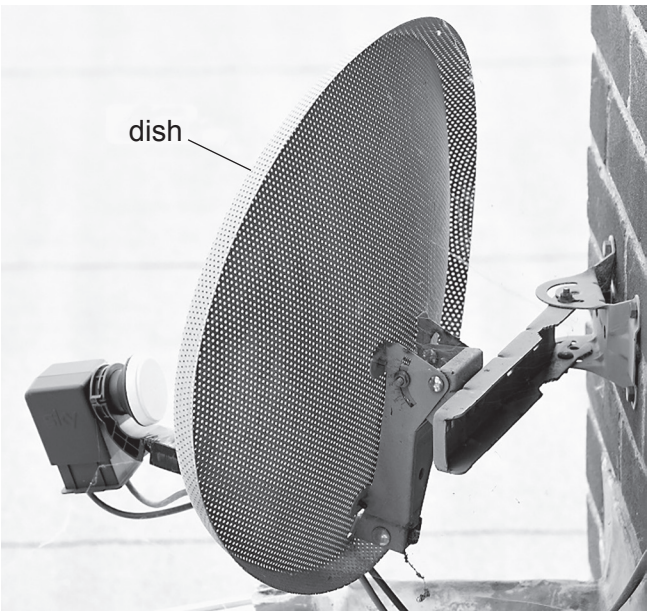

Fig. 1.1

(a) State the type of structure that has been used for the dish.

..... [1]

(b) Use sketches and notes to show a **different** example of the type of structure in your answer to **Part (a)**.

[2]

2 Fig. 2.1 shows three types of spring.

A **B** **C**

Fig. 2.1

State the force that each spring will resist.

A .....

B .....

C .....

[3]

3 Table 3.1 shows different resistant materials and properties.
Complete the table to identify the missing materials and properties.

Table 3.1

Material	Property
concrete	.....
.....	renewable resource
.....	will corrode in damp conditions
plastics	.....

[4]

4 Fig. 4.1 shows a parcel tape dispenser.

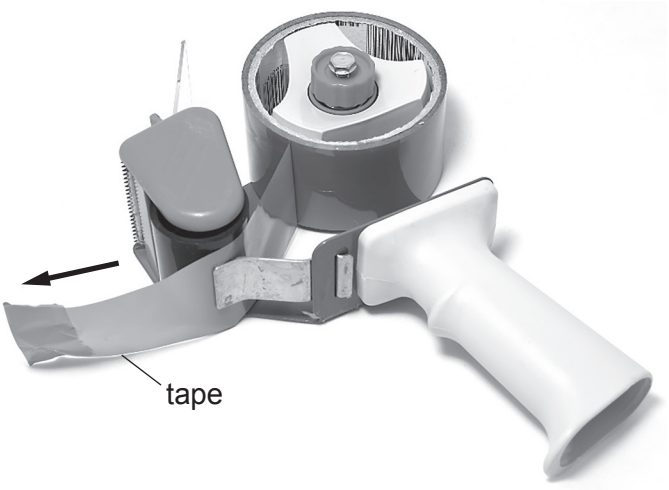

Fig. 4.1

Describe the conversion of motion that takes place when the tape is pulled out.

..... to ..... [2]

5 **(a)** Give **two** reasons why a mechanism may require lubrication.

1 .....

2 .....
[2]

(b) Name **two** types of lubrication suitable for use in a mechanism.

1 .....

2 .....
[2]

6 Use sketches and notes to show an example of a second order lever.

[2]

7 Fig. 7.1 shows an electronic circuit.

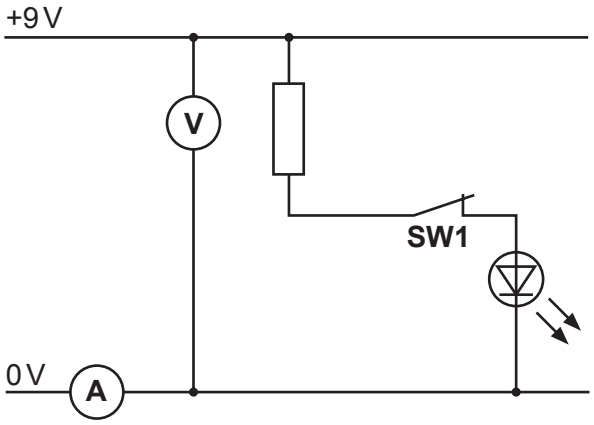

Fig. 7.1

Use the words below to complete the description of the circuit.

Each word may be used once or not at all.

capacitor **series** **0 V** **LED** **on**

parallel **+9 V** **off** **resistor**

Ammeter **A** is connected in ..... in the circuit. Voltmeter **V** is connected in ..... . The reading on the voltmeter will be ..... .

When switch **SW1** is pressed the ..... will be turned ..... . [5]

8 The following units are used to measure capacitance.

μF **pF** **F** **nF**

Complete the table below by adding the units in the correct order.
One has been done for you.

smallest					largest
				F	

[2]

Section B

Answer **one** question from this section.

9 **(a)** Fig. 9.1 shows part of a plastic case to hold a circuit board.

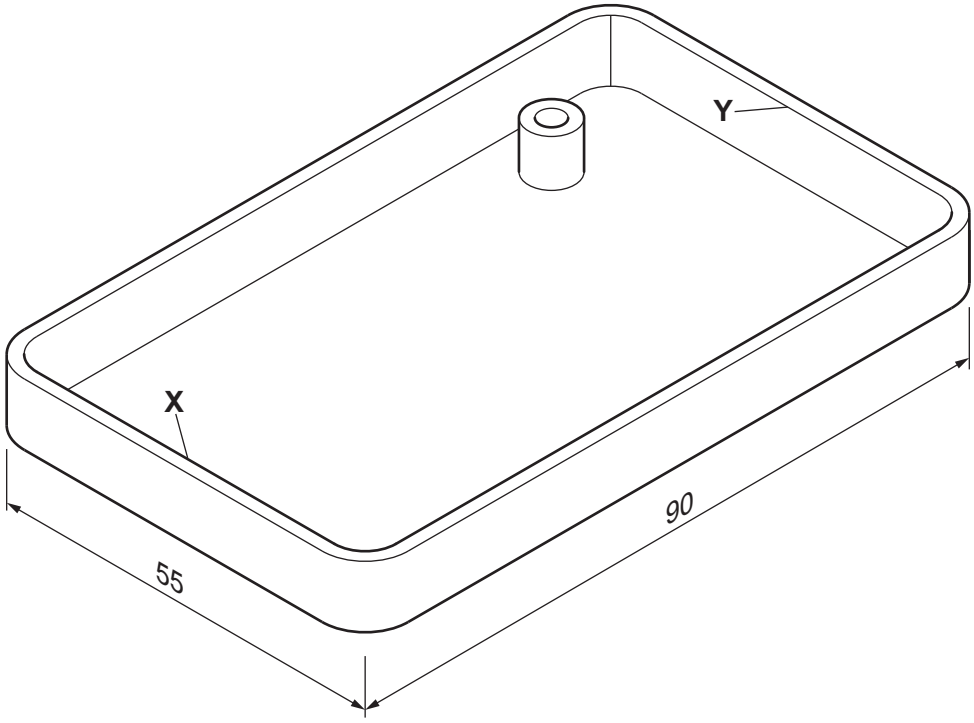

Fig. 9.1

(i) Draw a rib in the case between points **X** and **Y**. [2]

(ii) Add **four** gussets to the round pillar. [2]

(iii) Describe the purpose of the rib and gussets.

.....

.....

..... [2]

(iv) Give **two** reasons why the designer of the casing should consider disassembly of the product.

1 .....

.....

2 .....

.....
[2]

(b) Fig. 9.2 shows two steel tubes each 2 m long which need to be joined end-to-end.

(i) Use sketches and notes to show **one** permanent method of joining the tubes. Give details of any additional materials used.

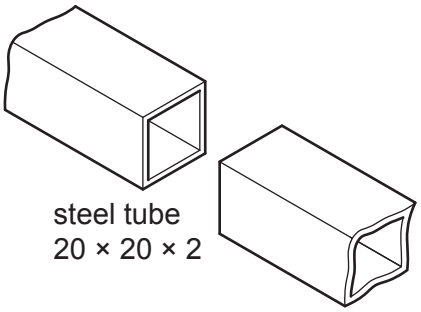

Fig. 9.2

[3]

(ii) Use sketches and notes to show **one** temporary method of joining the tubes. Give details of any additional materials or components used.

[3]

(c) Fig. 9.3 shows details of a tower crane in equilibrium, which is carrying a load of 5500 N. Two counterweights **A** and **B** each producing a force of 6200 N are used to balance the load.

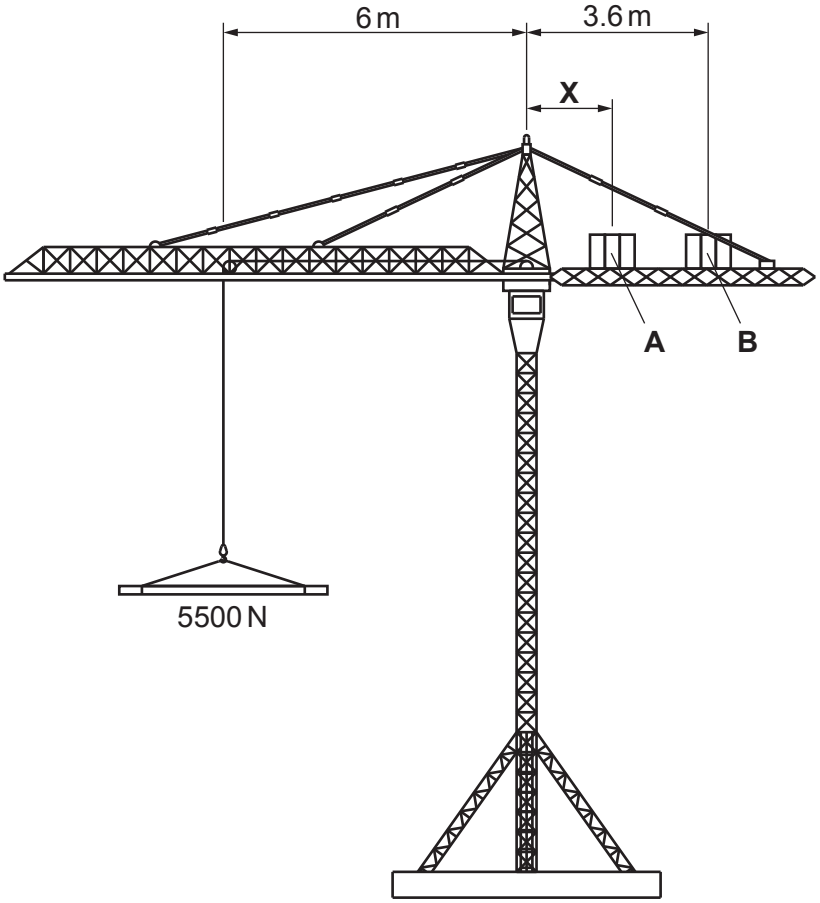

Fig. 9.3

(i) The crane is in a state of equilibrium.
Give the meaning of equilibrium.

..... [1]

(ii) Calculate distance **X** to the centre of counterweight **A**.

.....

.....

.....

..... [4]

(iii) Give **one** static load and **one** moving load that the crane must resist.

Static load .....

Moving load .....
[2]

(iv) The tower crane is designed as a number of prefabricated parts that are bolted together. Give **one** reason for this method of construction.

.....

..... [1]

(v) Explain the importance of 'Factor of Safety' in crane design.

.....

.....

.....

..... [3]

10 **(a)** Fig. 10.1 shows details of a cam operated clamp that is locked in place by a lever.

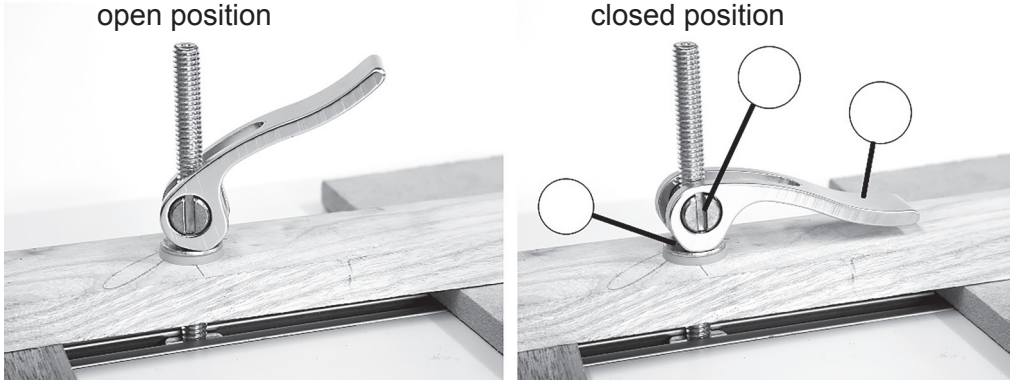

Fig. 10.1

(i) Mark the position of the fulcrum on the lever by adding the letter **F** in the correct circle. [1]

(ii) Name the order of lever used.

..... [1]

(iii) Fig. 10.2 shows details of the lever.

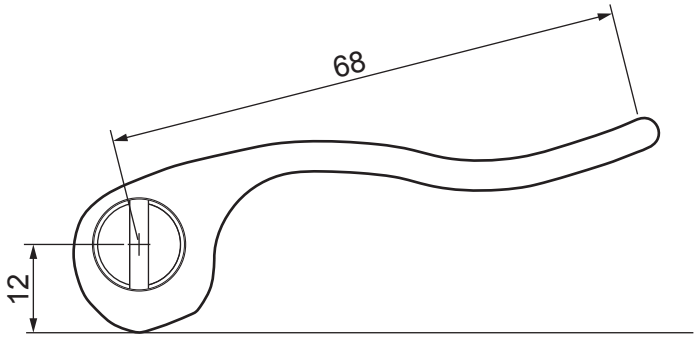

Fig. 10.2

Calculate the mechanical advantage given by the lever.

.....

.....

..... [2]

(iv) Give **two** advantages of using a cam operated clamp rather than a screw operated clamp.

1 .....

.....

2 .....

.....
[2]

(b) Fig. 10.3 shows a socket wrench with a ratchet and pawl drive.

Fig. 10.3

(i) Describe the benefits of using a ratchet and pawl drive for a socket wrench.

.....

.....

..... [2]

(ii) Explain the purpose of the reversing lever in the socket wrench.

.....

.....

.....

..... [3]

(iii) Use sketches and notes to show **one** different use of a ratchet and pawl mechanism.

[2]

(c) Fig. 10.4 shows a pulley system used for lifting heavy loads.

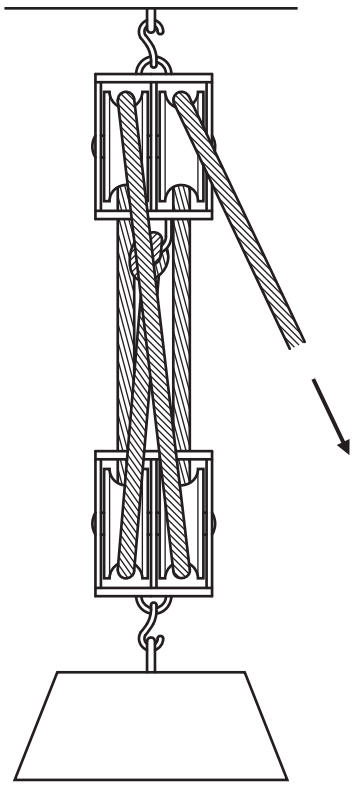

Fig. 10.4

(i) Describe how the velocity ratio of a pulley system can be determined.

.....

.....

.....

..... [2]

(ii) Calculate the length of rope that must be pulled through the system to raise the load by 100 mm.

.....

.....

..... [2]

(iii) Explain why the pulley system in Fig. 10.4 will not be 100% efficient.

.....

.....

..... [2]

(d) Fig. 10.5 shows a range of spur gears.
One gear of each size is available.

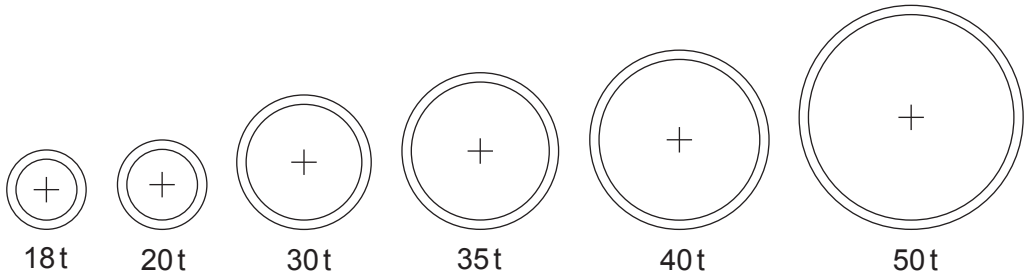

Fig. 10.5

Choose gears from the range and draw them in a position that will cause the driven shaft to rotate at twice the speed of the driver shaft and in the same direction as the driver shaft.

Label the driver gear and the number of teeth on all of the gears used.

[3]

(e) Fig. 10.6 shows the cross slide of a small lathe. The moving portion is held in place in a dovetail slot. A strip of nylon on one side has M4 adjustment screws to hold it in place.

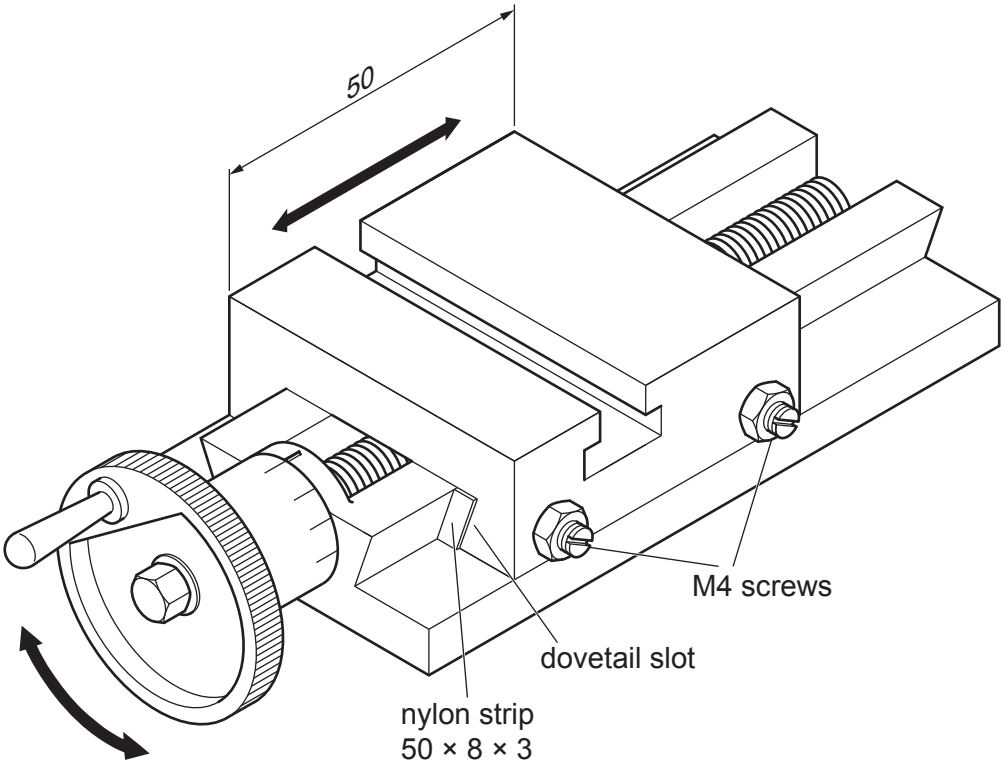

Fig. 10.6

(i) From the list below circle the type of bearing used between the moving parts.

ball **needle** **taper** **plain** **roller**

..... [1]

(ii) Give **two** reasons why nylon has been chosen for the adjustment strip.

1 .....

.....

2 .....

.....
[2]

11 **(a)** **(i)** Fig. 11.1 shows three switch symbols.

Fig. 11.1

Give the meaning of each symbol.

Switch **A** .....

Switch **B** .....

Switch **C** .....
[3]

(ii) Switching is often carried out using a relay.
Fig. 11.2 shows a 12 V DPDT relay.

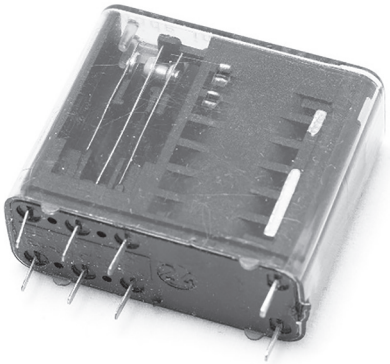

Fig. 11.2

Give **one** reason for using a relay in a circuit.

.....

..... [1]

(iii) Describe what is meant by '12 V DPDT'.

.....

.....

..... [2]

(iv) The relay has a switching capability of 10 A 240 V AC.
State what this means.

.....

.....

..... [1]

(b) Fig. 11.3 shows an incomplete circuit for a transistor switch.

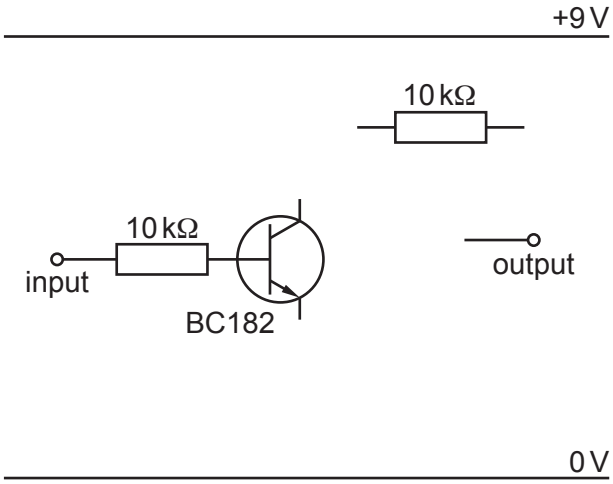

Fig. 11.3

(i) Complete the circuit in Fig. 11.3 so that the output is at +9 V when no voltage is applied to the input but changes to 0 V when a small voltage is applied to the input. [3]

(ii) Give **two** advantages of using a transistor switch instead of a mechanical switch.

1 .....

2 .....
[2]

(iii) Fig. 11.4 shows the transistor and pin diagram for the circuit in Fig. 11.3.

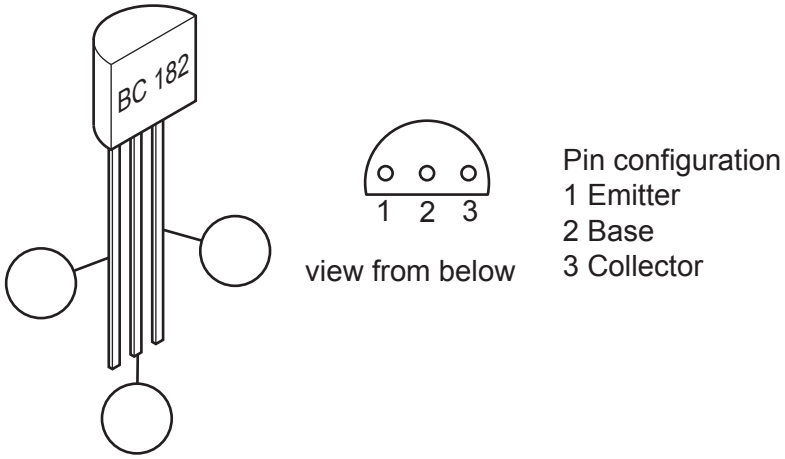

Fig. 11.4

Label each leg of the transistor on Fig. 11.4. [2]

(c) An air conditioning system requires two logic 1 inputs before it will switch on.
One input from a thermostat and one from a clock.

(i) State the type of logic gate that will give a logic 1 output for two logic 1 inputs.
The gate will give a logic 0 output for all other combinations.

..... [1]

(ii) The only logic IC available is a 4001B quad NOR gate.
This can be used for the required gate.
Fig. 11.5 shows the IC with input and output connections.

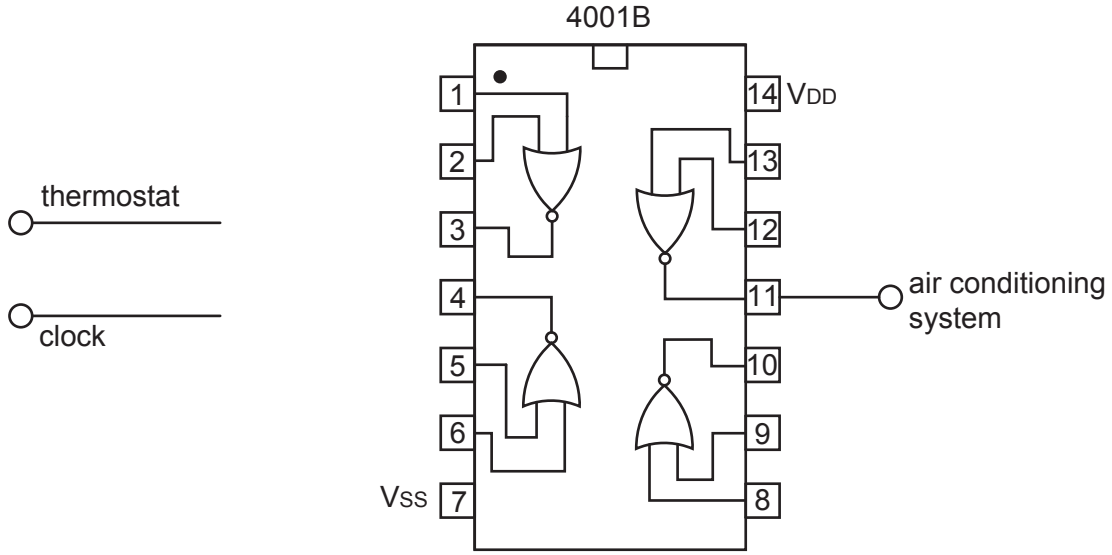

Fig. 11.5

The NOR gates are connected as follows.

- The thermostat and clock inputs are inverted, each using a single NOR gate
- The inverted signal from the thermostat is connected to pin 12
- The inverted signal from the clock is connected to pin 13.

Add the connections to Fig. 11.5. [3]

(iii) When designing a PCB for the circuit any unused inputs to the IC must be connected to either V_{DD} or V_{SS}.
State the pin numbers of the unused inputs.

..... [2]

(d) A toy truck has two LEDs that flash on and off continuously when a switch is pressed. The output signal to the LEDs is shown in Fig. 11.6.

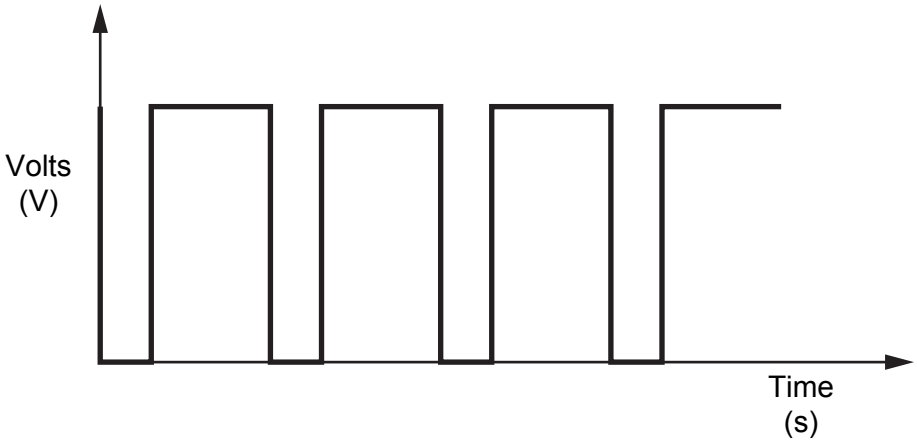

Fig. 11.6

(i) Circle the type of circuit from the list below that could give the output signal shown in Fig. 11.6.

monostable **amplifier** **astable** **comparator** **bistable** [1]

(ii) The circuit chosen uses a 555 timer IC.
The timing components are:

$R_1 = 10\,k\Omega$ $R_2 = 10\,k\Omega$ $C_1 = 47\,\mu F$

The formula for the time of one complete cycle is $T = 0.7\,(R_1 + 2R_2)\,C_1$
Calculate the value of T.

.....

.....

.....

..... [3]

(iii) Capacitor C_1 is polarised.
State the meaning of 'polarised'.

.....

.....

..... [1]

BLANK PAGE

BLANK PAGE

Permission to reproduce items where third-party owned material protected by copyright is included has been sought and cleared where possible. Every reasonable effort has been made by the publisher (UCLES) to trace copyright holders, but if any items requiring clearance have unwittingly been included, the publisher will be pleased to make amends at the earliest possible opportunity.

To avoid the issue of disclosure of answer-related information to candidates, all copyright acknowledgements are reproduced online in the Cambridge Assessment International Education Copyright Acknowledgements Booklet. This is produced for each series of examinations and is freely available to download at www.cambridgeinternational.org after the live examination series.

Cambridge Assessment International Education is part of the Cambridge Assessment Group. Cambridge Assessment is the brand name of the University of Cambridge Local Examinations Syndicate (UCLES), which itself is a department of the University of Cambridge.

© UCLES 2021